SALES DRAWING SALES DRAWING

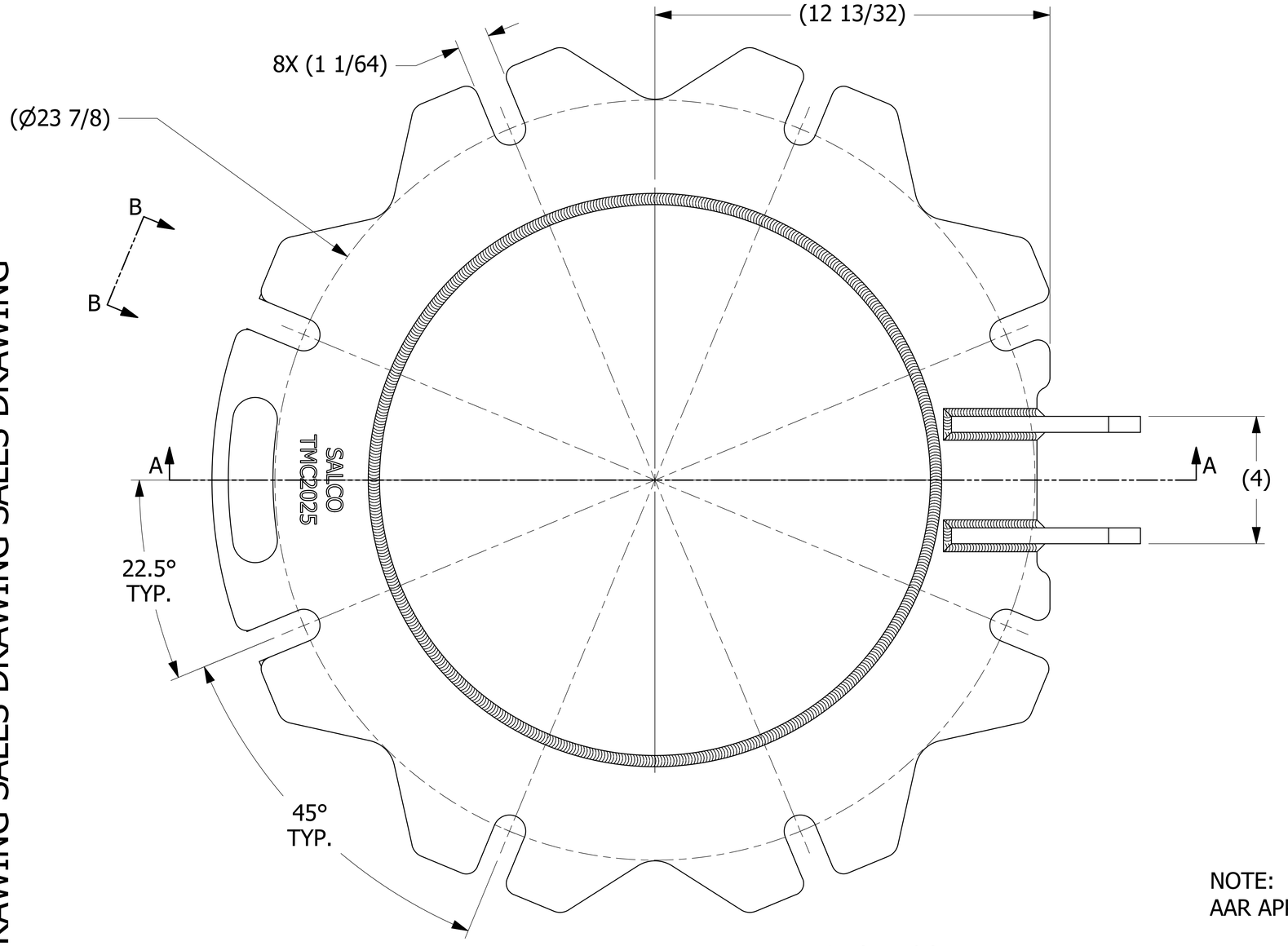

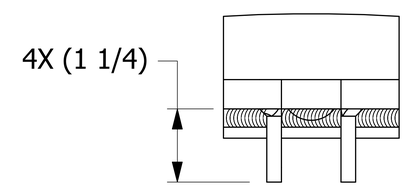

VIEW B-B
SCALE 1 : 1

NOTE:
AAR APPROVAL # E-182113.

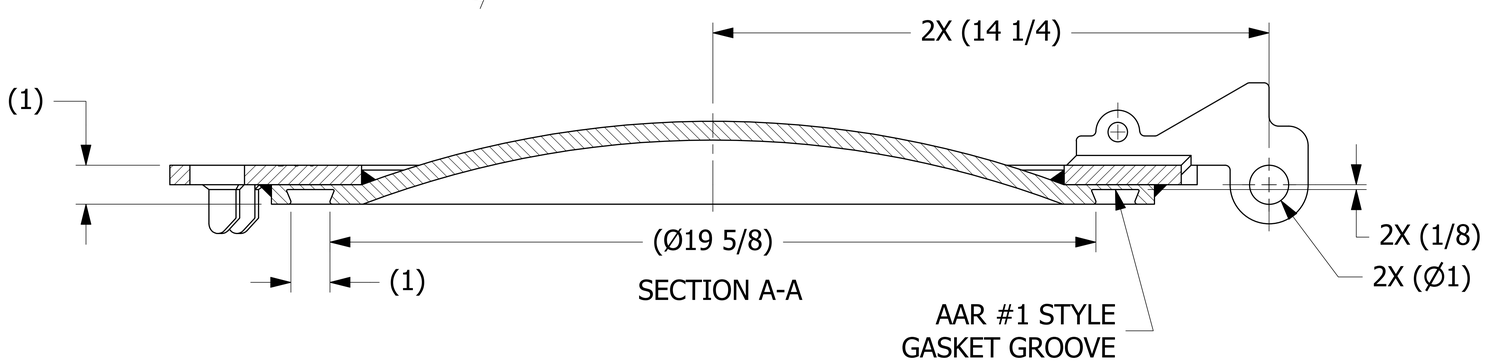

SECTION A-A

REV	BY	DATE	DESCRIPTION
I	WEB	5-15-19	REMOVED QAP4A-1 NOTE; Q-2.15.7 WAS QAP4C-1; D-008 WAS DSS 12; ADDED D-005 NOTE; AAR # WAS E-089005
H	RJP	11-15-17	HINGE WELD WAS 3/8"; 4.00 +.00/-.06 WAS 4.00; REMOVED (12); ADDED 4X (1 1/4), 4X (3/4), (12 13/32), & NOTE 6; ADDED "SALCO" TO ENGRAVING; UPDATED WELD NOTE TO DSS 12
G	RJP	9-23-16	TMCDR2025 WAS TMCR202C1 & TMCDSC1MF, UPDATED VIEWS/NOTES
F	JG	9-16-15	REPLACED TMCHS4TR W/ B40713
E	RJP	2-18-15	UPDATED GOEMETRY OF TMCR202C1
D	CHL	12-5-11	ADDED NOTE #5 & HEAT/LOT NOTE
C	GDS	10-19-11	ADDED VIEW D-D
B	CHL	10-29-10	ADDED PART # TO RING SURFACE AND UPDATED NOTES
A	CHL	10-9-08	NEW PART ADDED TO SYSTEM

UNLESS OTHERWISE SPECIFIED
DIMENSIONAL TOLERANCES
FRACTIONAL: ±1/16
X.XX: ±.03
X.XXX: ±.015
ANGULAR: ±1°
DEBURR ALL SHARP EDGES.
ALL MACHINED SURFACES TO HAVE A 125 RMS FINISH UNLESS NOTED OTHERWISE.
THIRD ANGLE PROJECTION

DRAWN BY:	CHL
CHECKED BY:	WRB
PROTOTYPE BY:	CHL
PROTOTYPE DATE:	7/17/2008
APPROVED FOR PRODUCTION BY:	WRB
PRODUCTION DATE:	10/9/2008

SALCO PRODUCTS, INC.

PART NAME: MANWAY COVER 20" 8-BOLT

MATERIAL: CARBON STEEL

PROJECT #: WAG0591 | SHEET #: 1 OF 1 | SCALE: 2:3

DRAWING #: E25631 | PART #: TMC2025

THIS PRINT, PROPERTY OF SALCO PRODUCTS INC, CONTAINS PROPRIETARY INFORMATION AND MUST NOT BE COPIED, REPRODUCED, OR USED DETRIMENTALLY TO OUR INTEREST.

SALES DRAWING SALES DRAWING